PROJECTION

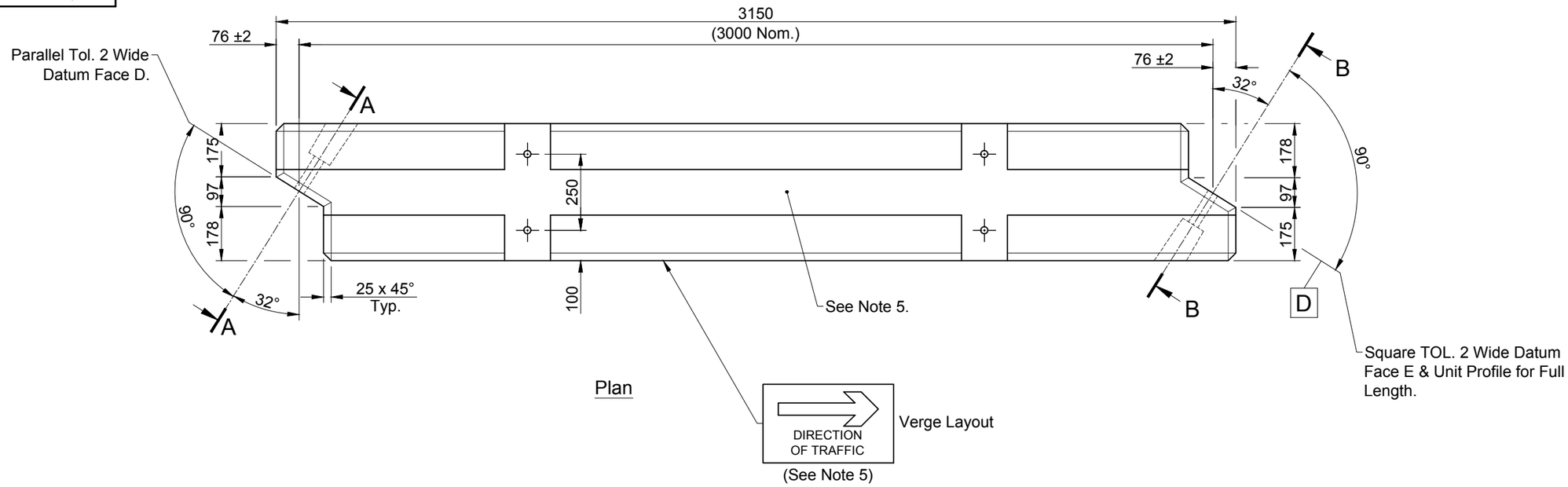

Plan

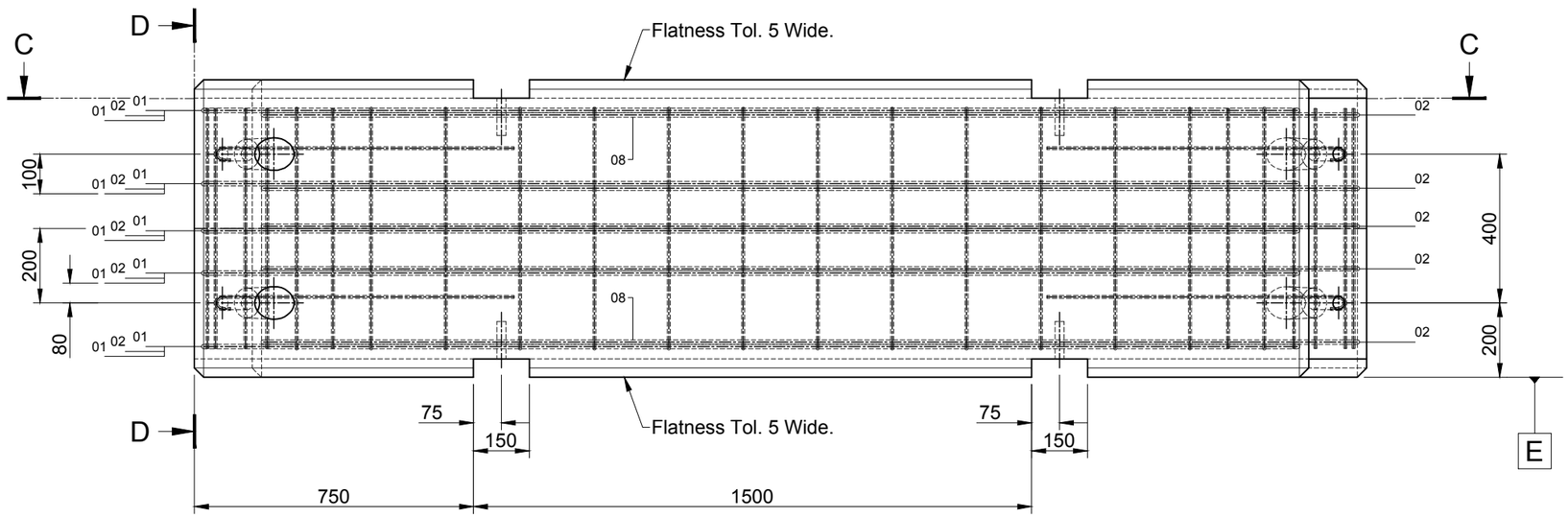

Elevation

Notes

1. Dimensions in millimetres
2. Tolerance to be ±0.5% unless otherwise stated.
3. Concrete to be grade 50 or grade 40 with air entrainment & in accordance with the department of transport specification.
4. Cover to reinforcement to be min. 25mm. Reinforcement to be in accordance with BS4485: 1989 For bar schedule see drawing 152. Bar to be fitted in opposite directions as shown in section C - C (typ. 5 positions).
5. The casting to be permanently marked at top surface as follows: Manufacturers name, trade mark or other means of identification & date of manufacture (month & year e.g. 5/ 91) & also direction of traffic & indication arrows to be marked as indicated.
6. The overlap of the scarf joint must always be in the direction of traffic flow.

REV	DATE	REASON FOR ISSUE	DRN	APP	REV	DATE	REASON FOR ISSUE	DRN	APP
					O	12.02.14	For Information	CTC	RD

TITLE :
Temporary Vertical Concrete Barrier (TVCB)
Intermediate Unit - Sheet 1 of 2
Elite Product Code : -

ELITE PRECAST CONCRETE LIMITED
HALESFIELD 9, TELFORD
SHROPSHIRE TF7 4QW

DRN :	CHKD :	DATE :	DRG SIZE :	SCALE:	DRG	REV
CTC	RD	12-02-14	A3	1:15	150	O