PROJECTION

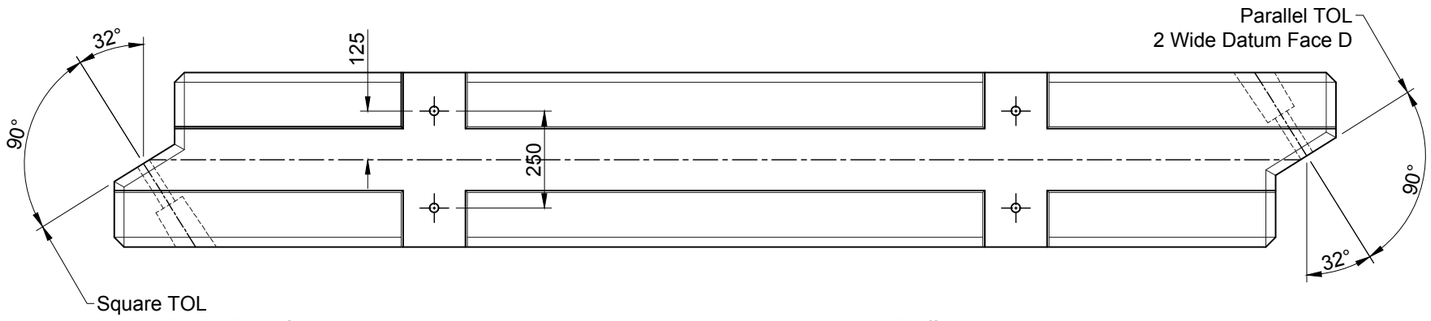

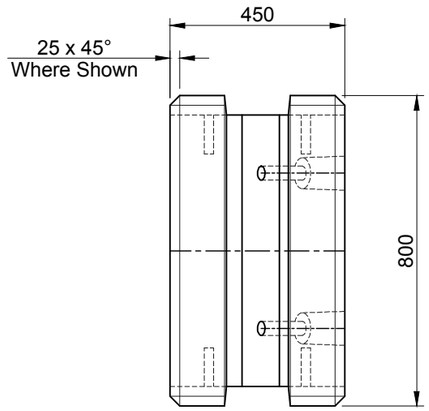

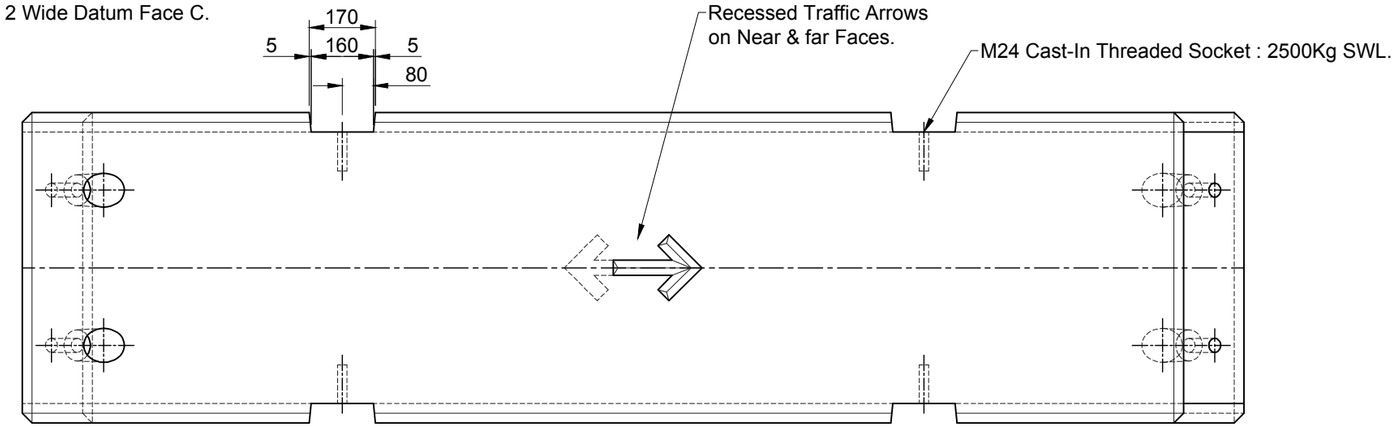

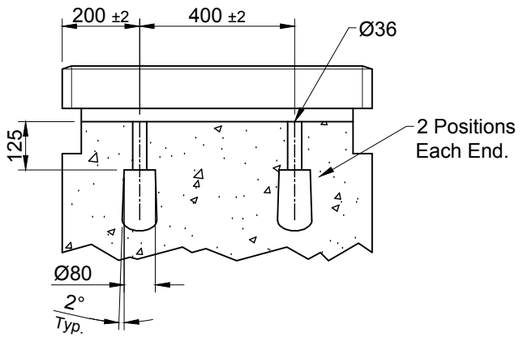

Part Section Arrow A - A

Detail Identical Both Ends

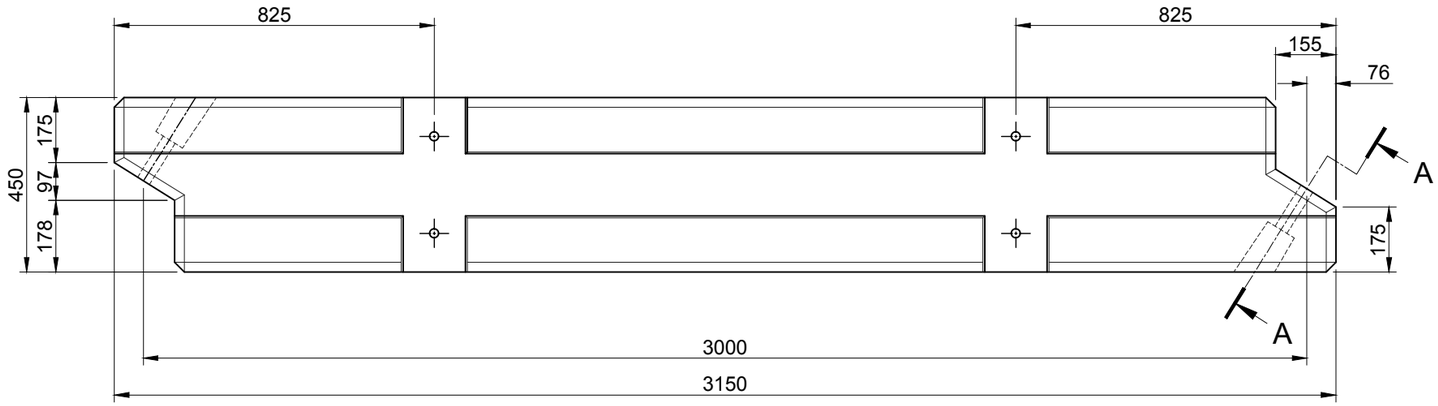

Notes

1. Dimensions in millimetres
2. Tolerance to be ±0.5% unless otherwise stated.
3. For reinforcement details see drawing 150, 151 & 152.
4. Concrete mix C50.
5. The overlap of the scarf joint must always be in the direction of traffic.

REV	DATE	REASON FOR ISSUE	DRN	APP	REV	DATE	REASON FOR ISSUE	DRN	APP
					O	22.01.14	For Information	CTC	RD

TITLE :
Temporary Vertical Concrete Barrier (TVCB)
Standard Unit
Elite Product Code : -

ELITE PRECAST CONCRETE LIMITED
HALESFIELD 9, TELFORD
SHROPSHIRE TF7 4QW

DRN :	CHKD :	DATE :	DRG SIZE :	SCALE:	DRG	REV
CTC	RD	22-01-14	A3	1:15	149	O